SECTION INT
INTERIOR

CONTENTS

PRECAUTION 3

PRECAUTIONS 3
Precaution for Supplemental Restraint System (SRS) "AIR BAG" and "SEAT BELT PRE-TENSIONER" 3
Precaution for Work 3

PREPARATION 4

PREPARATION 4
Special Service Tools 4
Commercial Service Tools 4

CLIP LIST 5
Descriptions for Clips 5

SYMPTOM DIAGNOSIS 9

SQUEAK AND RATTLE TROUBLE DIAGNOSES 9
Work Flow 9
Generic Squeak and Rattle Troubleshooting 10
Diagnostic Worksheet 13

REMOVAL AND INSTALLATION 15

FRONT DOOR FINISHER 15
Exploded View 15
Removal and Installation 15

REAR DOOR FINISHER 18
Exploded View 18
Removal and Installation 18

BODY SIDE TRIM 21
Exploded View 21

FRONT PILLAR FINISHER 21
FRONT PILLAR FINISHER : Removal and Installation 21

KICKING PLATE 22
KICKING PLATE : Removal and Installation 22

DASH SIDE FINISHER 24
DASH SIDE FINISHER : Removal and Installation 24

BODY SIDE WELT 24
BODY SIDE WELT : Removal and Installation 24

CENTER PILLAR LOWER FINISHER 25
CENTER PILLAR LOWER FINISHER : Removal and Installation 25

CENTER PILLAR UPPER FINISHER 25
CENTER PILLAR UPPER FINISHER : Removal and Installation 25

FLOOR TRIM 27
Exploded View 27
Removal and Installation 27

HEADLINING 30
Exploded View 30
Removal and Installation 31

LUGGAGE TRIM 33
Exploded View 33

LUGGAGE REAR PLATE 33
LUGGAGE REAR PLATE : Removal and Installation 34

LUGGAGE SIDE LOWER FINISHER 34
LUGGAGE SIDE LOWER FINISHER : Removal and Installation 34

LUGGAGE SIDE UPPER FINISHER 35
LUGGAGE SIDE UPPER FINISHER : Removal and Installation 35

BACK DOOR TRIM 36
Exploded View 36

BACK DOOR INNER FINISHER 36

BACK DOOR INNER FINISHER : Removal and Installation 36

BACK DOOR PULL HANDLE 36

BACK DOOR PULL HANDLE : Removal and Installation 36

PRECAUTION

PRECAUTIONS

Precaution for Supplemental Restraint System (SRS) "AIR BAG" and "SEAT BELT PRE-TENSIONER"

INFOID:0000000009446817

The Supplemental Restraint System such as “AIR BAG” and “SEAT BELT PRE-TENSIONER”, used along with a front seat belt, helps to reduce the risk or severity of injury to the driver and front passenger for certain types of collision. Information necessary to service the system safely is included in the SR and SB section of this Service Manual.

WARNING:

- **To avoid rendering the SRS inoperative, which could increase the risk of personal injury or death in the event of a collision which would result in air bag inflation, all maintenance must be performed by an authorized NISSAN/INFINITI dealer.**
- **Improper maintenance, including incorrect removal and installation of the SRS, can lead to personal injury caused by unintentional activation of the system. For removal of Spiral Cable and Air Bag Module, see the SR section.**
- **Do not use electrical test equipment on any circuit related to the SRS unless instructed to in this Service Manual. SRS wiring harnesses can be identified by yellow and/or orange harnesses or harness connectors.**

PRECAUTIONS WHEN USING POWER TOOLS (AIR OR ELECTRIC) AND HAMMERS

WARNING:

- **When working near the Airbag Diagnosis Sensor Unit or other Airbag System sensors with the Ignition ON or engine running, DO NOT use air or electric power tools or strike near the sensor(s) with a hammer. Heavy vibration could activate the sensor(s) and deploy the air bag(s), possibly causing serious injury.**
- **When using air or electric power tools or hammers, always switch the Ignition OFF, disconnect the battery and wait at least three minutes before performing any service.**

Precaution for Work

INFOID:0000000009446818

- When removing or disassembling each component, be careful not to damage or deform it. If a component may be subject to interference, be sure to protect it with a shop cloth.
- When removing (disengaging) components with a screwdriver or similar tool, be sure to wrap the component with a shop cloth or vinyl tape to protect it.
- Protect the removed parts with a shop cloth and prevent them from being dropped.
- Replace a deformed or damaged clip.
- If a part is specified as a non-reusable part, always replace it with a new one.
- Be sure to tighten bolts and nuts securely to the specified torque.
- After installation is complete, be sure to check that each part works properly.
- Follow the steps below to clean components:

- Water soluble dirt:
- Dip a soft cloth into lukewarm water, wring the water out of the cloth and wipe the dirty area.
- Then rub with a soft, dry cloth.
- Oily dirt:
- Dip a soft cloth into lukewarm water with mild detergent (concentration: within 2 to 3%) and wipe the dirty area.
- Then dip a cloth into fresh water, wring the water out of the cloth and wipe the detergent off.
- Then rub with a soft, dry cloth.
- Do not use organic solvent such as thinner, benzene, alcohol or gasoline.
- For genuine leather seats, use a genuine leather seat cleaner.

PREPARATION

PREPARATION

Special Service Tools

INFOID:0000000009417400

The actual shapes of Kent-Moore tools may differ from those of special service tools illustrated here.

Tool number (Kent-Moore No.) Tool name	Description
— (J-39570) Chassis Ear 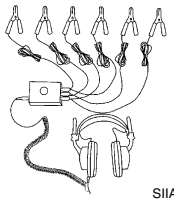 SIIA0993E	Locating the noise
— (J-50397) NISSAN Squeak and Rattle Kit ALJIA1232ZZ	Repairing the cause of noise
— (J-46534) Trim Tool Set 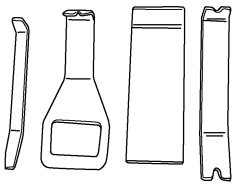 AWJIA0483ZZ	Removing trim components

Commercial Service Tools

INFOID:0000000009417401

(Kent-Moore No.) Tool name	Description
(J-39565) Engine Ear 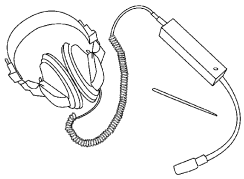 SIIA0995E	Locating the noise
(—) Power tools 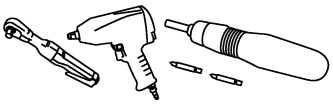 PIIB1407E	Loosening nuts, screws and bolts

CLIP LIST

Descriptions for Clips

INFOID:0000000009417399

Replace any clips which are damaged during removal or installation.

Symbol No.	Shapes	Removal & Installation
C101		**Removal:** Remove by bending up with flat-bladed screwdrivers or clip remover.
C103		**Removal:** Remove with a clip remover.
C203		**Removal:** Push center pin to catching position. (Do not remove center pin by hitting it.) Push **Installation:** Push
C205		**Removal:** Flat-bladed screwdriver Clip Finisher
C206		**Removal:**

SIIA0315E

Symbol No.	Shapes	Removal & Installation
CE103		**Removal:**
CF110	Clip A Clip B	**Removal:** Finisher Clip A Flat-bladed screwdrivers Clip B
CF118	Clip A Clip B (Grommet)	**Removal:** Flat-bladed screwdrivers Finisher Body panel Clip A Clip B (Grommet)
CR103		**Removal:** Holder portion of clip must be spread out to remove rod.
CS101		**Removal:** 1. Screw out with a Phillips screwdriver. 2. Remove female portion with flat-bladed screwdriver.

SIIA0316E

Symbol No.	Shapes	Removal & Installation	
CG101		**Removal:** Rotate 45˚ to remove **Removal:**	**Installation:**
CS102			
CS113		**Removal:** Disconnect upper connection of clip with a flat-bladed screwdriver, then remove clip while inserting a flat-bladed screwdriver between body panel and clip.	
C111			

SIIA0317E

Symbol No.	Shapes	Removal & Installation
CG104		**Removal:** **Remove by bending up with flat-bladed screwdrivers.** Radiator grille Body panel
CE114		
CF118	Clip A Clip B (Grommet)	**Removal:** Flat-bladed screwdrivers Finisher Body panel Clip A Clip B (Grommet)

ALJIA0564GB

SYMPTOM DIAGNOSIS

SQUEAK AND RATTLE TROUBLE DIAGNOSES

Work Flow

INFOID:0000000009671220

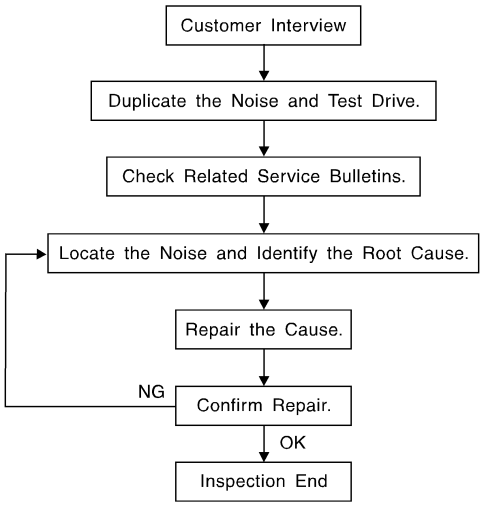

SBT842

CUSTOMER INTERVIEW

Interview the customer if possible, to determine the conditions that exist when the noise occurs. Use the Diagnostic Worksheet during the interview to document the facts and conditions when the noise occurs and any customer's comments; refer to INT-13, "Diagnostic Worksheet". This information is necessary to duplicate the conditions that exist when the noise occurs.

- The customer may not be able to provide a detailed description or the location of the noise. Attempt to obtain all the facts and conditions that exist when the noise occurs (or does not occur).
- If there is more than one noise in the vehicle, be sure to diagnose and repair the noise that the customer is concerned about. This can be accomplished by test driving the vehicle with the customer.
- After identifying the type of noise, isolate the noise in terms of its characteristics. The noise characteristics are provided so the customer, service adviser and technician are all speaking the same language when defining the noise.
- Squeak —(Like tennis shoes on a clean floor)
  Squeak characteristics include the light contact/fast movement/brought on by road conditions/hard surfaces = higher pitch noise/softer surfaces = lower pitch noises/edge to surface = chirping.
- Creak—(Like walking on an old wooden floor)
  Creak characteristics include firm contact/slow movement/twisting with a rotational movement/pitch dependent on materials/often brought on by activity.
- Rattle—(Like shaking a baby rattle)
  Rattle characteristics include the fast repeated contact/vibration or similar movement/loose parts/missing clip or fastener/incorrect clearance.
- Knock —(Like a knock on a door)
  Knock characteristics include hollow sounding/sometimes repeating/often brought on by driver action.
- Tick—(Like a clock second hand)
  Tick characteristics include gentle contacting of light materials/loose components/can be caused by driver action or road conditions.
- Thump—(Heavy, muffled knock noise)
  Thump characteristics include softer knock/dead sound often brought on by activity.
- Buzz—(Like a bumble bee)
  Buzz characteristics include high frequency rattle/firm contact.
- Often the degree of acceptable noise level will vary depending upon the person. A noise that you may judge as acceptable may be very irritating to the customer.
- Weather conditions, especially humidity and temperature, may have a great effect on noise level.

DUPLICATE THE NOISE AND TEST DRIVE

If possible, drive the vehicle with the customer until the noise is duplicated. Note any additional information on the Diagnostic Worksheet regarding the conditions or location of the noise. This information can be used to duplicate the same conditions when you confirm the repair.
If the noise can be duplicated easily during the test drive, to help identify the source of the noise, try to duplicate the noise with the vehicle stopped by doing one or all of the following:
1) Close a door.
2) Tap or push/pull around the area where the noise appears to be coming from.
3) Rev the engine.
4) Use a floor jack to recreate vehicle “twist”.
5) At idle, apply engine load (electrical load, half-clutch on M/T model, drive position on CVT and A/T models).
6) Raise the vehicle on a hoist and hit a tire with a rubber hammer.
- Drive the vehicle and attempt to duplicate the conditions the customer states exist when the noise occurs.
- If it is difficult to duplicate the noise, drive the vehicle slowly on an undulating or rough road to stress the vehicle body.

CHECK RELATED SERVICE BULLETINS

After verifying the customer concern or symptom, check ASIST for Technical Service Bulletins (TSBs) related to that concern or symptom.
If a TSB relates to the symptom, follow the procedure to repair the noise.

LOCATE THE NOISE AND IDENTIFY THE ROOT CAUSE

1. Narrow down the noise to a general area. To help pinpoint the source of the noise, use a listening tool (Chassis Ear: J-39570, Engine Ear: J-39565 and mechanic's stethoscope).
2. Narrow down the noise to a more specific area and identify the cause of the noise by:
   - removing the components in the area that you suspect the noise is coming from.
     Do not use too much force when removing clips and fasteners, otherwise clips and fasteners can be broken or lost during the repair, resulting in the creation of new noise.
   - tapping or pushing/pulling the component that you suspect is causing the noise.
     Do not tap or push/pull the component with excessive force, otherwise the noise will be eliminated only temporarily.
   - feeling for a vibration with your hand by touching the component(s) that you suspect is (are) causing the noise.
   - placing a piece of paper between components that you suspect are causing the noise.
   - looking for loose components and contact marks.
     Refer to INT-10, "Generic Squeak and Rattle Troubleshooting".

REPAIR THE CAUSE

- If the cause is a loose component, tighten the component securely.
- If the cause is insufficient clearance between components:
- separate components by repositioning or loosening and retightening the component, if possible.
- insulate components with a suitable insulator such as urethane pads, foam blocks, felt cloth tape or urethane tape. A NISSAN Squeak and Rattle Kit (J-50397) is available through your authorized NISSAN Parts Department.

CAUTION:
Do not use excessive force as many components are constructed of plastic and may be damaged.
NOTE:
- Always check with the Parts Department for the latest parts information.
- The materials contained in the NISSAN Squeak and Rattle Kit (J-50397) are listed on the inside cover of the kit; and can each be ordered separately as needed.
- The following materials not found in the kit can also be used to repair squeaks and rattles.
- SILICONE GREASE: Use instead of UHMW tape that will be visible or does not fit. The silicone grease will only last a few months.
- SILICONE SPRAY: Use when grease cannot be applied.
- DUCT TAPE: Use to eliminate movement.

CONFIRM THE REPAIR

Confirm that the cause of a noise is repaired by test driving the vehicle. Operate the vehicle under the same conditions as when the noise originally occurred. Refer to the notes on the Diagnostic Worksheet.

Generic Squeak and Rattle Troubleshooting

INFOID:0000000009671221

Refer to Table of Contents for specific component removal and installation information.

INSTRUMENT PANEL

Most incidents are caused by contact and movement between:

1. Cluster lid A and the instrument panel
2. Acrylic lens and combination meter housing
3. Instrument panel to front pillar finisher
4. Instrument panel to windshield
5. Instrument panel pins
6. Wiring harnesses behind the combination meter
7. A/C defroster duct and duct joint

These incidents can usually be located by tapping or moving the components to duplicate the noise or by pressing on the components while driving to stop the noise. Most of these incidents can be repaired by applying felt cloth tape or silicone spray (in hard to reach areas). Urethane pads can be used to insulate wiring harness.

CAUTION:

Do not use silicone spray to isolate a squeak or rattle. If you saturate the area with silicone, you will not be able to recheck the repair.

CENTER CONSOLE

Components to pay attention to include:

1. Shift selector assembly cover to finisher
2. A/C control unit and cluster lid C
3. Wiring harnesses behind audio and A/C control unit

The instrument panel repair and isolation procedures also apply to the center console.

DOORS

Pay attention to the:

1. Finisher and inner panel making a slapping noise
2. Inside handle escutcheon to door finisher
3. Wiring harnesses tapping
4. Door striker out of alignment causing a popping noise on starts and stops

Tapping or moving the components or pressing on them while driving to duplicate the conditions can isolate many of these incidents. You can usually insulate the areas with felt cloth tape or insulator foam blocks from the NISSAN Squeak and Rattle Kit (J-50397) to repair the noise.

TRUNK

Trunk noises are often caused by a loose jack or loose items put into the trunk by the owner.
In addition look for:

1. Trunk lid bumpers out of adjustment
2. Trunk lid striker out of adjustment
3. The trunk lid torsion bars knocking together
4. A loose license plate or bracket

Most of these incidents can be repaired by adjusting, securing or insulating the item(s) or component(s) causing the noise.

SUNROOF/HEADLINING

Noises in the sunroof/headlining area can often be traced to one of the following:

1. Sunroof lid, rail, linkage or seals making a rattle or light knocking noise
2. Sun visor shaft shaking in the holder
3. Front or rear windshield touching headlining and squeaking

Again, pressing on the components to stop the noise while duplicating the conditions can isolate most of these incidents. Repairs usually consist of insulating with felt cloth tape.

OVERHEAD CONSOLE (FRONT AND REAR)

Overhead console noises are often caused by the console panel clips not being engaged correctly. Most of these incidents are repaired by pushing up on the console at the clip locations until the clips engage.
In addition look for:

1. Loose harness or harness connectors.
2. Front console map/reading lamp lens loose.
3. Loose screws at console attachment points.

SEATS

When isolating seat noise it's important to note the position the seat is in and the load placed on the seat when the noise is present. These conditions should be duplicated when verifying and isolating the cause of the noise.

Cause of seat noise include:

1. Headrest rods and holder
2. A squeak between the seat pad cushion and frame
3. The rear seatback lock and bracket

These noises can be isolated by moving or pressing on the suspected components while duplicating the conditions under which the noise occurs. Most of these incidents can be repaired by repositioning the component or applying urethane tape to the contact area.

UNDERHOOD

Some interior noise may be caused by components under the hood or on the engine wall. The noise is then transmitted into the passenger compartment.

Causes of transmitted underhood noise include:

1. Any component installed to the engine wall
2. Components that pass through the engine wall
3. Engine wall mounts and connectors
4. Loose radiator installation pins
5. Hood bumpers out of adjustment
6. Hood striker out of adjustment

These noises can be difficult to isolate since they cannot be reached from the interior of the vehicle. The best method is to secure, move or insulate one component at a time and test drive the vehicle. Also, engine rpm or load can be changed to isolate the noise. Repairs can usually be made by moving, adjusting, securing, or insulating the component causing the noise.

Diagnostic Worksheet

INFOID:0000000009671226

Dear Customer:
We are concerned about your satisfaction with your vehicle. Repairing a squeak or rattle sometimes can be very difficult. To help us fix your vehicle right the first time, please take a moment to note the area of the vehicle where the squeak or rattle occurs and under what conditions. You may be asked to take a test drive with a service advisor or technician to ensure we confirm the noise you are hearing.

SQUEAK & RATTLE DIAGNOSTIC WORKSHEET

I. WHERE DOES THE NOISE COME FROM? (circle the area of the vehicle)
The illustrations are for reference only, and may not reflect the actual configuration of your vehicle.

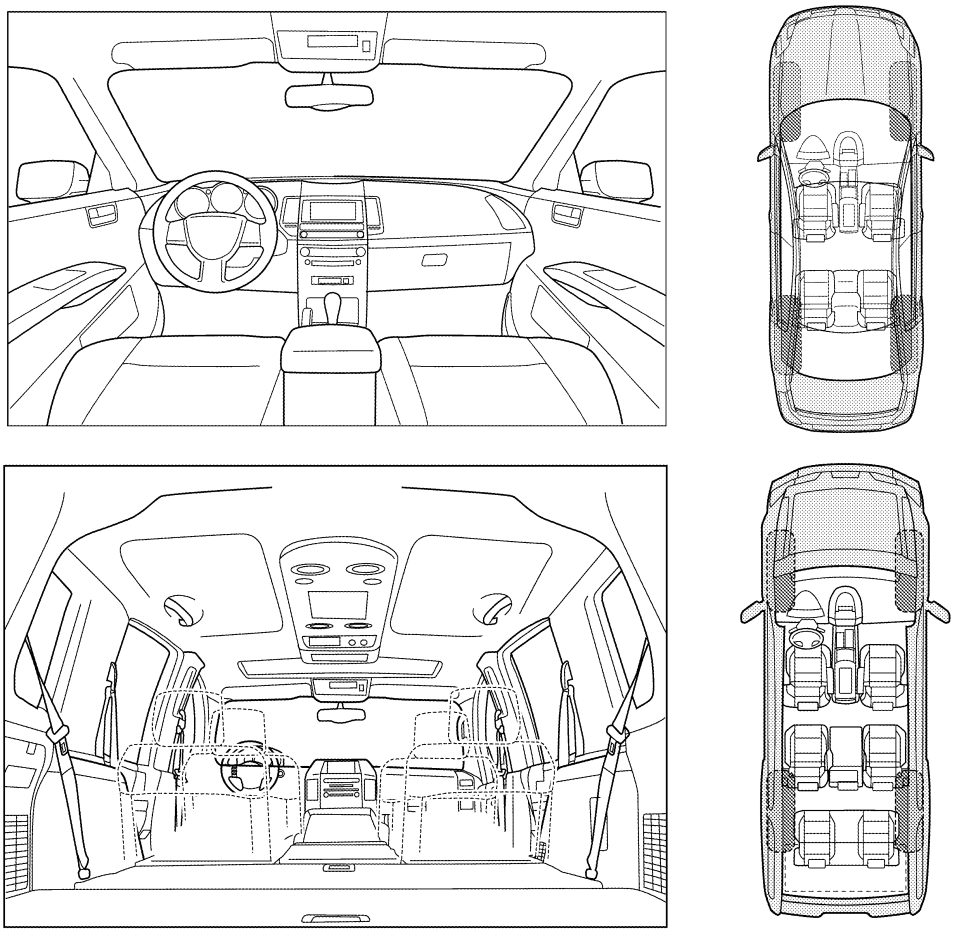

Continue to page 2 of the worksheet and briefly describe the location of the noise or rattle. In addition, please indicate the conditions which are present when the noise occurs.

-1-

LAIA0072E

SQUEAK & RATTLE DIAGNOSTIC WORKSHEET - page 2

Briefly describe the location where the noise occurs:

_____

_____

II. WHEN DOES IT OCCUR? (please check the boxes that apply)

- ☐ Anytime
- ☐ 1st time in the morning
- ☐ Only when it is cold outside
- ☐ Only when it is hot outside
- ☐ After sitting out in the rain
- ☐ When it is raining or wet
- ☐ Dry or dusty conditions
- ☐ Other:

III. WHEN DRIVING:

- ☐ Through driveways
- ☐ Over rough roads
- ☐ Over speed bumps
- ☐ Only about ____ mph
- ☐ On acceleration
- ☐ Coming to a stop
- ☐ On turns: left, right or either (circle)
- ☐ With passengers or cargo
- ☐ Other: _____
- ☐ After driving _____ miles or _____ minutes

IV. WHAT TYPE OF NOISE

- ☐ Squeak (like tennis shoes on a clean floor)
- ☐ Creak (like walking on an old wooden floor)
- ☐ Rattle (like shaking a baby rattle)
- ☐ Knock (like a knock at the door)
- ☐ Tick (like a clock second hand)
- ☐ Thump (heavy muffled knock noise)
- ☐ Buzz (like a bumble bee)

TO BE COMPLETED BY DEALERSHIP PERSONNEL

Test Drive Notes:

_____

_____

_____

	YES	NO	Initials of person performing
Vehicle test driven with customer	☐	☐	_____
- Noise verified on test drive	☐	☐	_____
- Noise source located and repaired	☐	☐	_____
- Follow up test drive performed to confirm repair	☐	☐	_____

VIN: _____ Customer Name _____

W.O.# _____ Date: _____

This form must be attached to Work Order

LAIA0071E

REMOVAL AND INSTALLATION

FRONT DOOR FINISHER

Exploded View

INFOID:0000000008969699

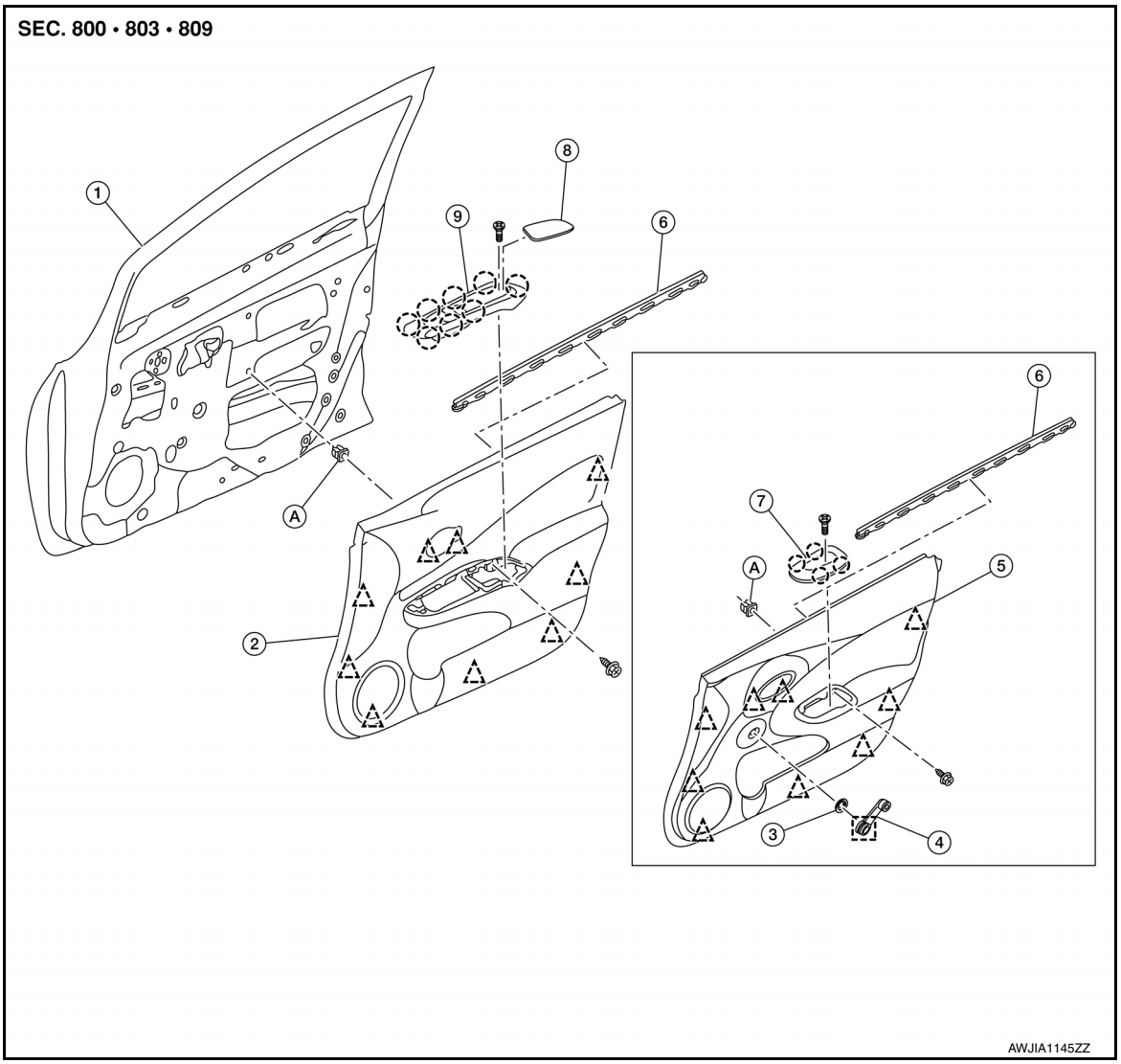

1. Front door panel	2. Power window/lock front door finisher	3. Manual window crank washer (if equipped)
4. Manual window crank handle (if equipped)	5. Manual window/lock door finisher (if equipped)	6. Front door inside seal
7. Storage tray (if equipped)	8. Door pull handle escutcheon	9. Power window and door lock/unlock switch (RH) finisher
A. Grommet	Clip	Metal clip
Pawl		

NOTE:
RH side door shown; LH side door similar.

Removal and Installation

INFOID:0000000008969700

REMOVAL - POWER WINDOW

1. Remove door pull handle escutcheon using a suitable tool.
2. Remove screw (B) from power window and door lock/unlock switch (RH) finisher.
3. Remove power window and door lock/unlock switch (RH) finisher (1) using a suitable tool (A).
   ◌: Pawl

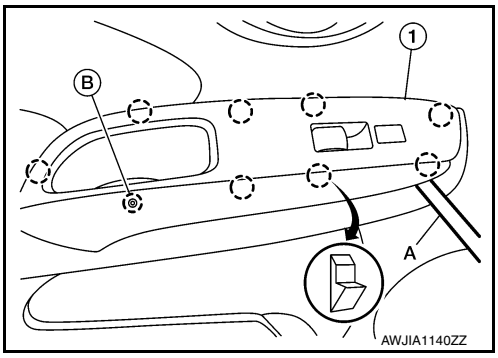

4. Disconnect the harness connector from the power window and door lock/unlock switch (RH).
5. Remove front door finisher bolt (A).

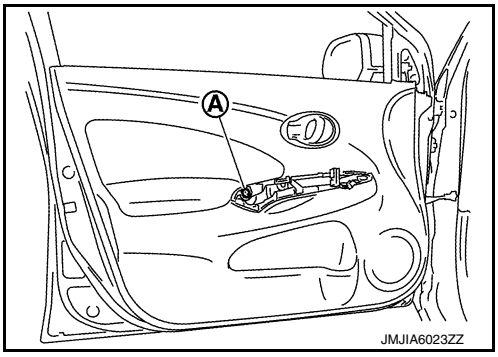

6. Release clips using a suitable tool (A) and remove front door finisher as shown.
   △: Clip

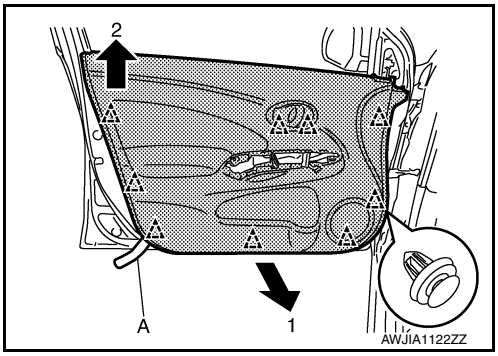

INSTALLATION

Installation is in the reverse order of removal.

CAUTION:

- **Visually check the clips and pawls for deformation and damage during installation.**
- **When installing front door finisher, check that clips and pawls are securely placed into door panel holes.**

REMOVAL - MANUAL WINDOW

1. Remove door pull handle escutcheon using a suitable tool.
2. Release pawls using a suitable tool and remove storage tray (LH/RH).

3. Release the metal clip (A) behind the manual window crank handle using a suitable tool (B). Pull the manual window crank handle (1) outward from the front door finisher and remove handle.
4. Remove front door finisher.
5. Remove front door finisher bolt (A).

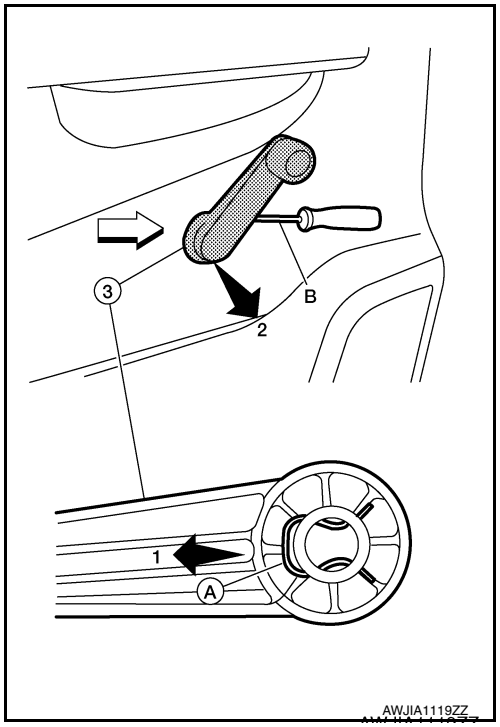

6. Release clips using a suitable tool (A) and remove front door finisher as shown.
   △: Clip

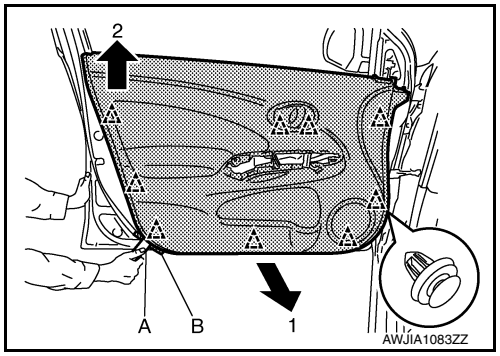

INSTALLATION

Installation is in the reverse order of removal.

CAUTION:

- **Visually check the clips and pawls for deformation and damage during installation.**
- **When installing front door finisher, check that clips and pawls are securely placed into door panel holes.**

REAR DOOR FINISHER

Exploded View

INFOID:0000000008969701

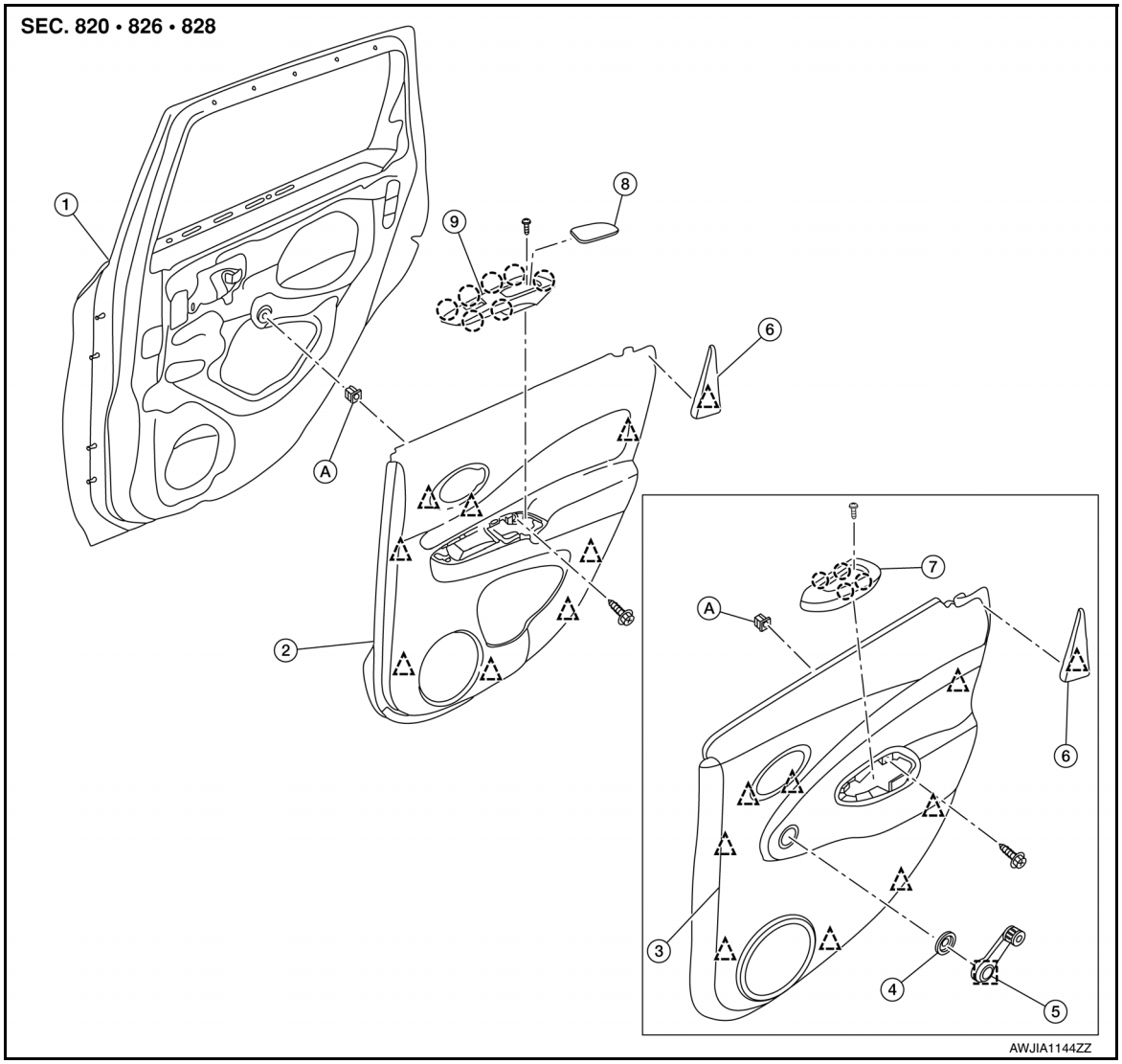

1.	Rear door panel	2.	Rear door finisher	3.	Rear manual window door finisher (if equipped)
4.	Manual window crank washer (if equipped)	5.	Manual window crank handle (if equipped)	6.	Rear door corner finisher
7.	Manual window storage tray (if equipped)	8.	Rear power window switch finisher (if equipped)	A.	Grommet
	Pawl		Clip		Metal Clip

Removal and Installation

INFOID:0000000008969702

REMOVAL - POWER WINDOW

1. Release rear door corner finisher clip using a suitable tool.
2. Remove rear door pull handle escutcheon using a suitable tool. .

3. Remove screw (B) from power window and door lock/unlock switch (RH) finisher.
4. Remove power window and door lock/unlock switch (RH) finisher (1) using a suitable tool (A).
   ◌: Pawl

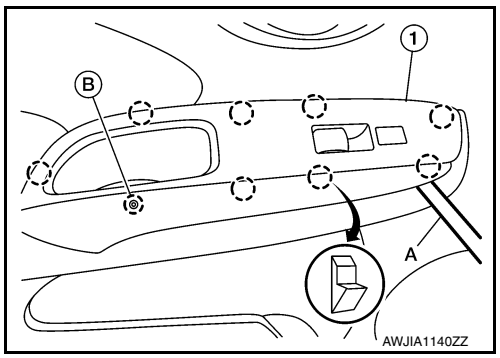

5. Disconnect the harness connector from the power window and door lock/unlock switch (RH).
6. Remove rear door finisher bolt (A).

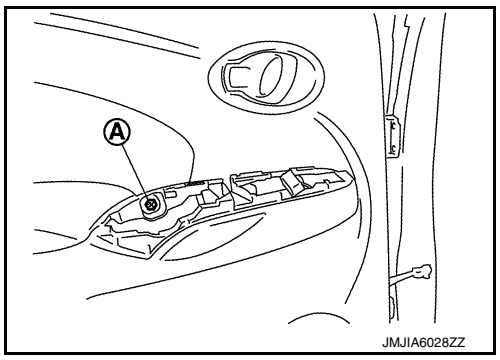

7. Release rear door finisher clips using a suitable tool (A) and remove rear door finisher as shown.
   △: Clip

INSTALLATION

Installation is in the reverse order of removal.

CAUTION:

- **Visually check the clips and pawls for deformation and damage during installation.**
- **When installing rear door finisher, check that clips and pawls are securely placed into door panel holes.**

REMOVAL - MANUAL WINDOW

1. Release rear door corner finisher clip using a suitable tool.
2. Release storage tray pawls using a suitable tool and remove storage tray .

3. Release the metal clip (A) behind the manual window crank handle using a suitable tool (B). Pull the manual window crank handle (1) outward from the front door finisher and remove handle.

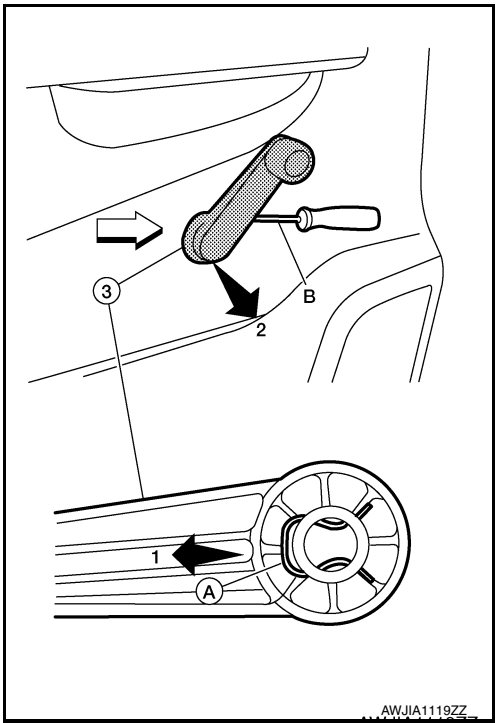

4. Remove rear door finisher bolt (A).

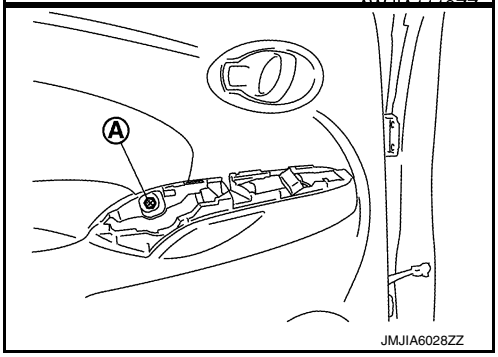

5. Release rear door finisher clips using a suitable tool (A) and remove rear door finisher as shown.
   △: Clip

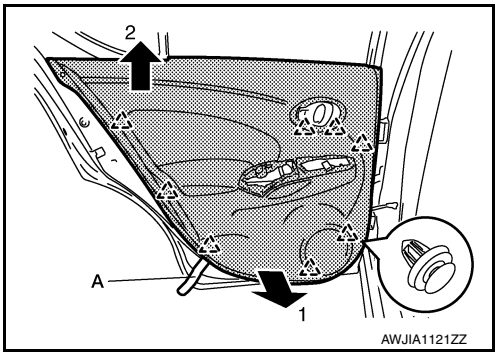

INSTALLATION

Installation is in the reverse order of removal.

CAUTION:

- **Visually check the clips and pawls for deformation and damage during installation.**
- **When installing rear door finisher, check that clips and pawls are securely placed into door panel holes.**

BODY SIDE TRIM

Exploded View

INFOID:0000000008969703

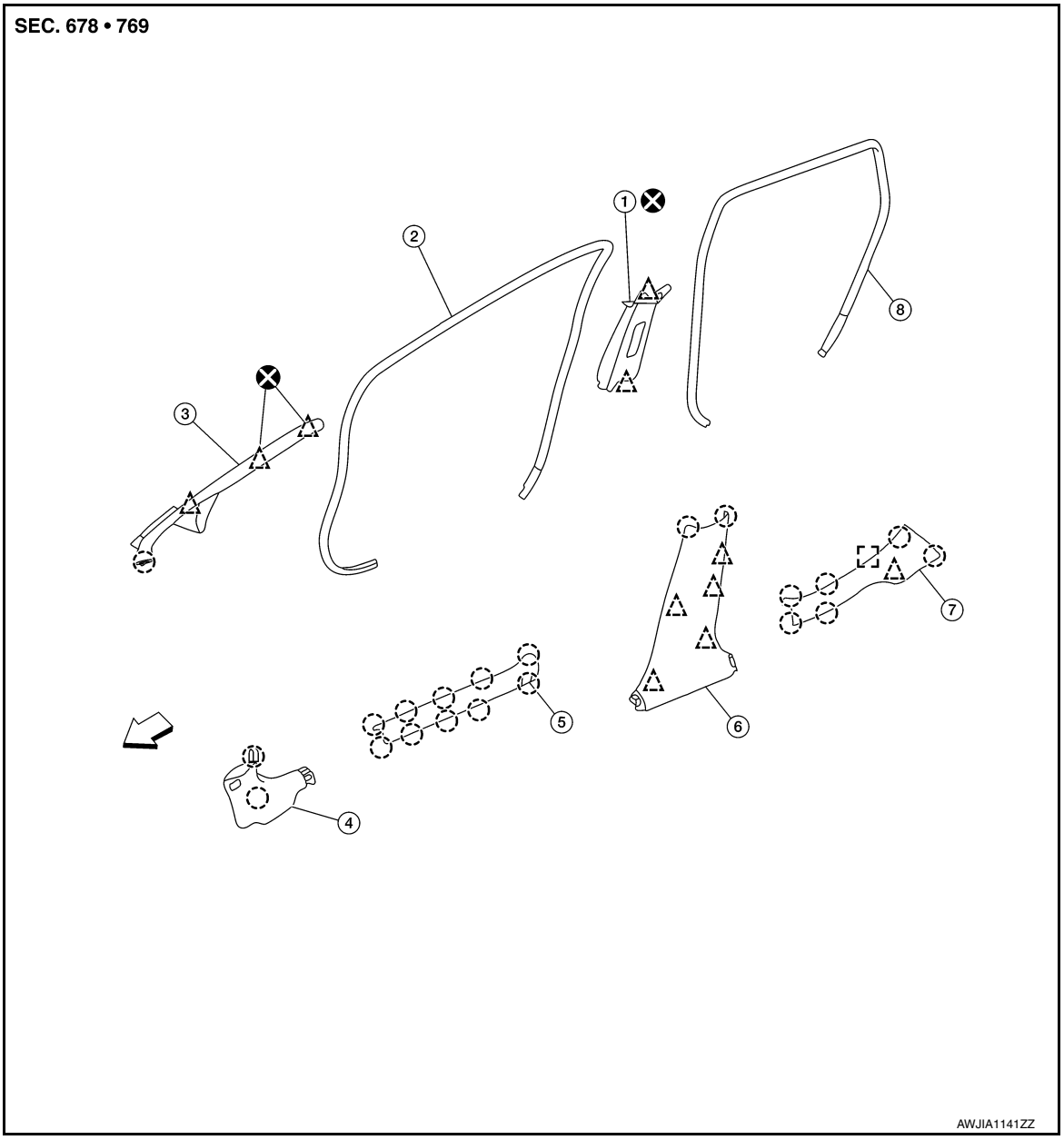

1. Center pillar upper finisher (RH)
2. Front body side welt (RH)
3. Front pillar finisher (RH)
4. Dash side finisher (RH)
5. Front kicking plate (RH)
6. Center pillar lower finisher (RH)
7. Rear kicking plate (RH)
8. Rear body side welt (RH)

Front

Clip

Pawl

FRONT PILLAR FINISHER

FRONT PILLAR FINISHER : Removal and Installation

INFOID:0000000008969704

REMOVAL

1. Remove front pillar portion of front body side welt.

2. Pull front pillar finisher downward as shown to release the front pillar finisher clip (bottom).
   △: Clip
   ◌: Pawl

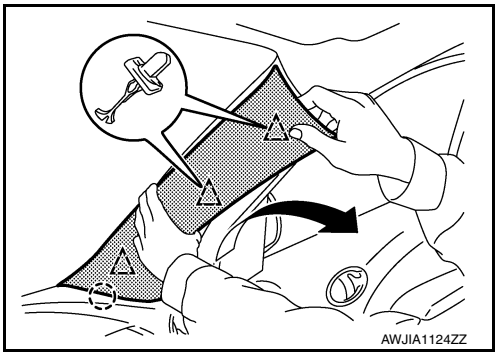

3. Cut and discard front pillar finisher tether clips.
4. Remove the remaining piece of the tether clip (B) using a suitable tool (A).

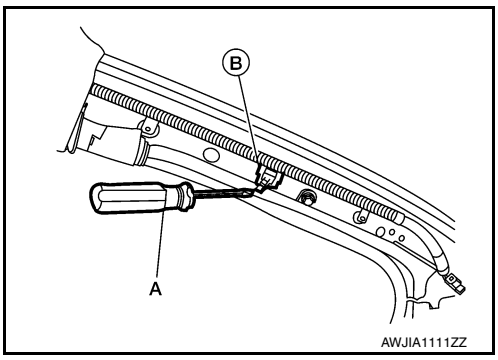

INSTALLATION

1. Install new front pillar finisher tether clips (A) to the front pillar finisher by inserting clip end and rotating 90 degrees to fit.
   CAUTION:
   - **Do not reuse tether clips. Replace with new part after removal.**
   - **Make sure to install tether clip to front pillar finisher before installing front pillar finisher.**
   - **When installing tether clip to front pillar finisher, be sure to install by aligning to the cutout.**
   - **Visually check the clip for deformation and damage during installation. Replace with new one if necessary.**
   - **When installing front pillar finisher, check that clip and tether clips are securely placed into body panel holes.**
2. Install the front pillar finisher to the front pillar.

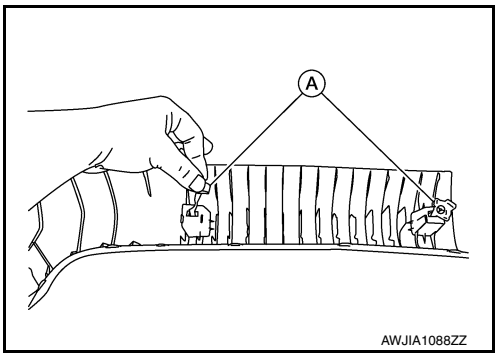

KICKING PLATE

KICKING PLATE : Removal and Installation

INFOID:0000000008969706

FRONT KICKING PLATE

Removal

1. Release front kicking plate pawls and metal clip using a suitable tool (A) and remove front kicking plate as shown.
   ◯: Pawl
   ⬚: Metal clip

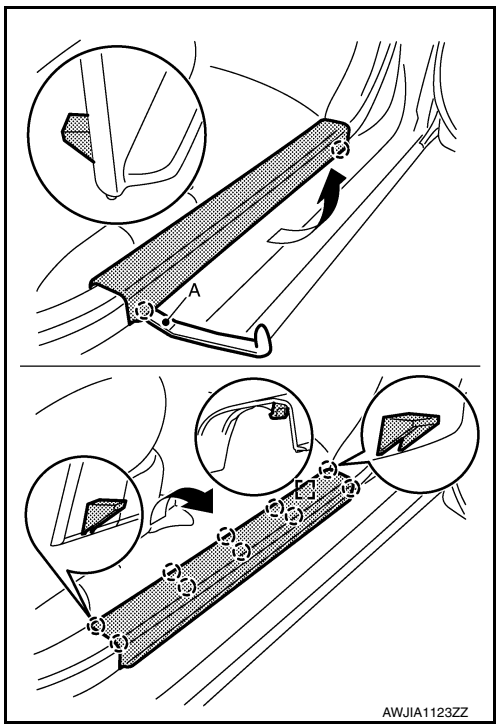

Installation
Installation is in the reverse order of removal.

CAUTION:
- **Visually check the clips and pawls for deformation and damage during installation.**
- **When installing front kicking plate, check that clips and pawls are securely placed into body panel holes.**

REAR KICKING PLATE

Removal

1. Remove rear seat cushion. Refer toSE-48, "Seat Cushion".
2. Lift rear end of rear kicking plate to release metal clip, then rotate front end of rear kicking plate to release pawls and remove.
   ◯: Pawl
   ⬚: Metal clip

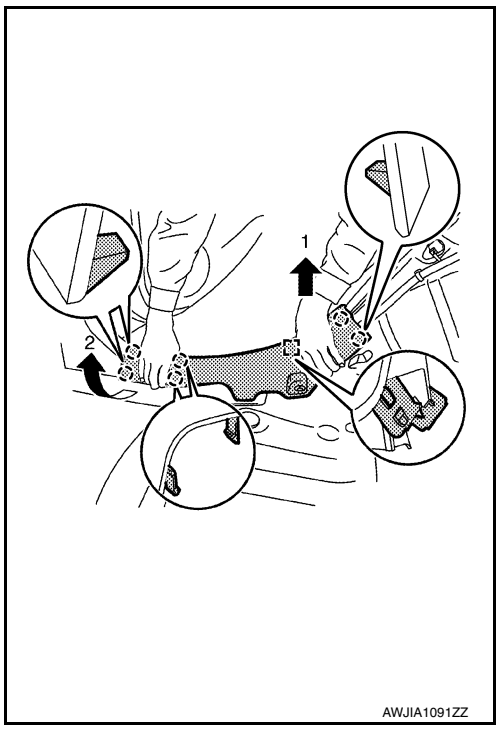

Installation
Installation is in the reverse order of removal.

CAUTION:
- **Visually check the clips and pawls for deformation and damage during installation.**
- **When installing rear kicking plate, check that clips and pawls are securely placed into body panel holes.**

DASH SIDE FINISHER

DASH SIDE FINISHER : Removal and Installation

INFOID:0000000008969707

REMOVAL

1. Remove front kicking plate. Refer to INT-22, "KICKING PLATE : Removal and Installation".
2. Lift up rear end of dash side finisher to release pawls.
   ◌: Pawl

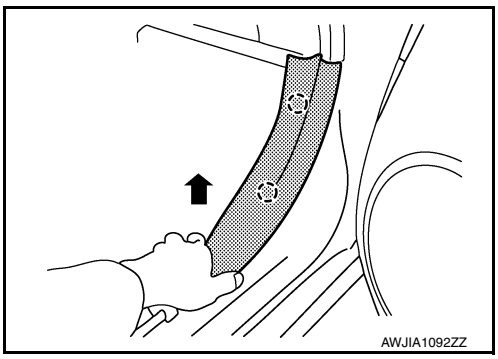

3. Pull back dash side finisher to release dash side finisher from stud and remove.

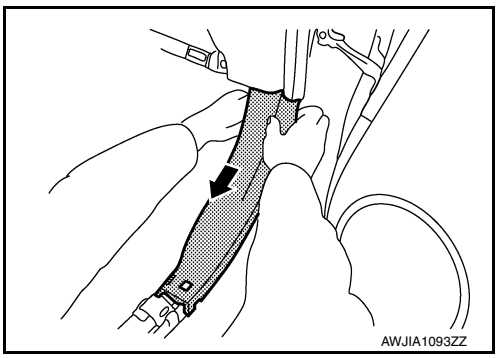

INSTALLATION

Installation is in the reverse order of removal.

CAUTION:
- **Visually check the pawls for deformation and damage during installation.**
- **When installing, check that finisher is aligned with stud bolt located on floor panel.**
- **When installing dash side finisher, check that pawls are securely placed into body panel holes.**

BODY SIDE WELT

BODY SIDE WELT : Removal and Installation

INFOID:0000000008969708

FRONT BODY SIDE WELT

Removal

1. Remove the dash side finisher. Refer to INT-24, "DASH SIDE FINISHER : Removal and Installation".
2. Remove front body side welt.

Installation

Installation is in the reverse order of removal.

REAR BODY SIDE WELT

Removal

1. Remove rear kicking plate. Refer to INT-22, "KICKING PLATE : Removal and Installation".
2. Remove rear body side welt.

Installation

Installation is in the reverse order of removal.

CENTER PILLAR LOWER FINISHER

CENTER PILLAR LOWER FINISHER : Removal and Installation

INFOID:0000000008969709

REMOVAL

1. Remove front kicking plate and rear kicking plate. Refer to INT-22, "KICKING PLATE : Removal and Installation".
2. Remove center pillar lower finisher as shown.

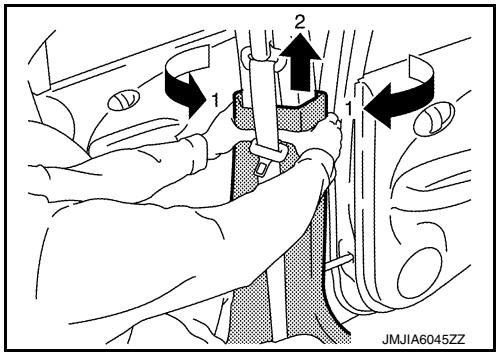

INSTALLATION

Installation is in the reverse order of removal.

CAUTION:

- **Visually check the pawls and clips for deformation and damage during installation. Replace component if necessary.**

CENTER PILLAR UPPER FINISHER

CENTER PILLAR UPPER FINISHER : Removal and Installation

INFOID:0000000008969710

REMOVAL

CAUTION:

- **Be careful not to apply excessive force when removing center pillar upper finisher. Otherwise, clip may be damaged and fragments may drop in body panels.**

1. Slide front seat to the full forward position.
2. Release pawls, using a suitable tool and remove the seat belt height adjuster finisher (1).
   ◌: Pawl

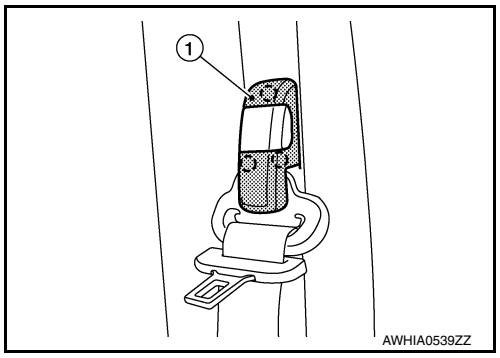

3. Remove front D-ring anchor bolt.
   CAUTION:
   Before removing D-ring anchor bolt note the positions of washers and spacers for correct installation.
4. Remove front body side welt and rear body side welt. Refer to INT-24, "BODY SIDE WELT : Removal and Installation".
5. Remove center pillar lower finisher. Refer to INT-25, "CENTER PILLAR LOWER FINISHER : Removal and Installation".
6. Release center pillar upper finisher upper clip using a suitable tool as shown.
   CAUTION:

When releasing molded in clip, follow the steps as shown to prevent finisher or clip damage.

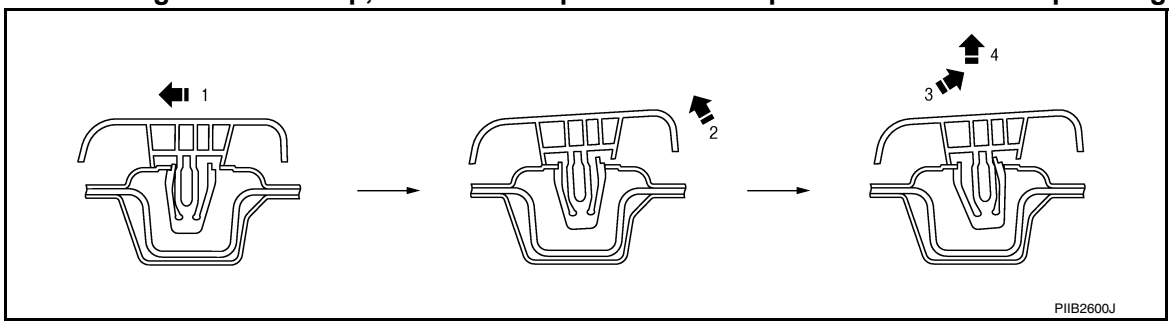

7. Release center pillar upper finisher lower clip using a suitable tool (A) and remove.
   △: Clip
   CAUTION:
   Do not reuse center pillar upper finisher.

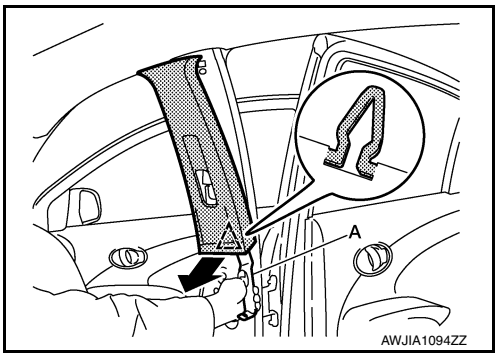

INSTALLATION

Installation is in the reverse order of removal.

CAUTION:

- **Do not reuse center pillar upper finisher. Replace with new part for installation.**
- **When installing center pillar upper finisher, check that clips are securely placed in body panel holes.**

FLOOR TRIM

Exploded View

INFOID:0000000009446822

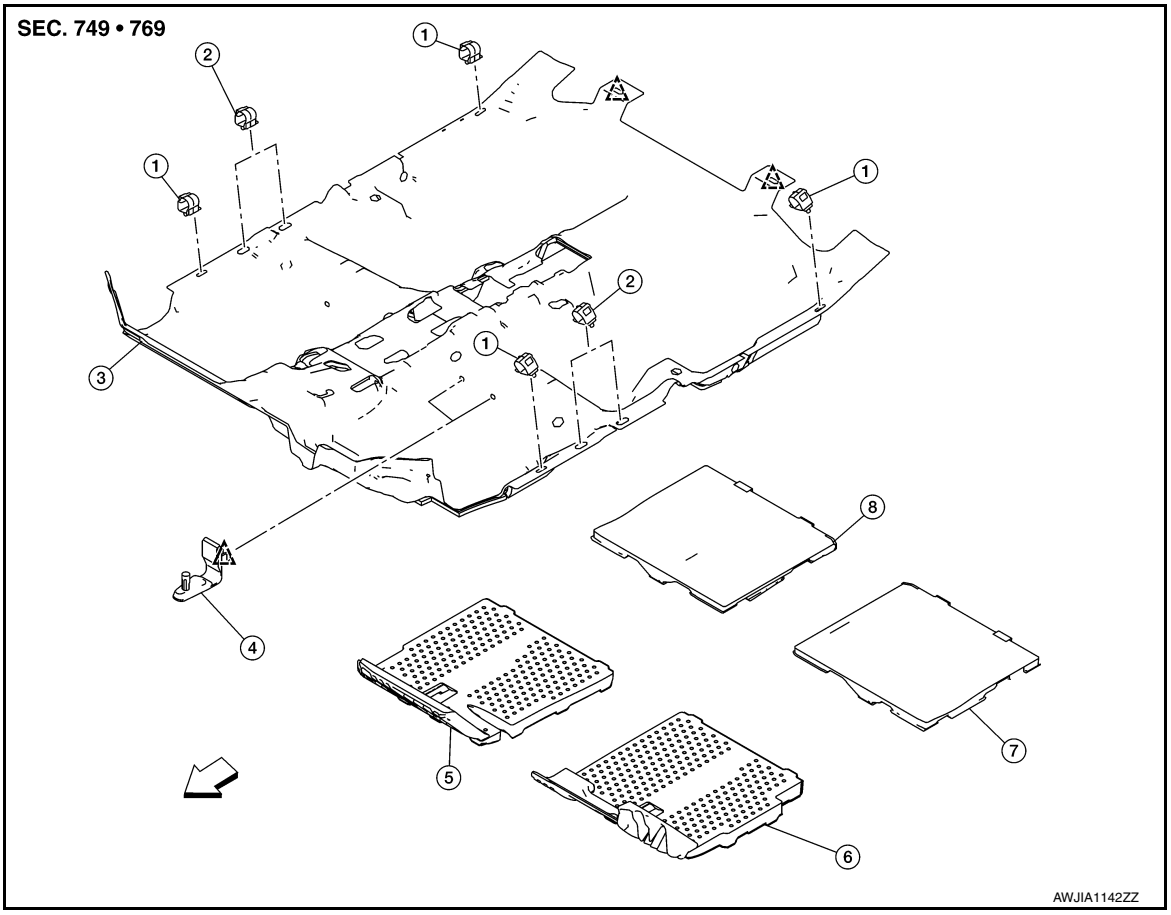

1.	Harness clip A	2.	Harness clip B	3.	Floor trim
4.	Carpet hook	5.	Front floor spacer (RH)	6.	Front floor spacer (LH)
7.	Rear floor spacer (LH)	8.	Rear floor spacer (RH)	⇦	Front
△	Clip				

Removal and Installation

INFOID:0000000008969712

WARNING:
- **Before servicing the SRS, turn the ignition switch off, disconnect both battery terminals then wait at least three minutes.**
- **Do not drop the seat belt retractor. Always handle it with care.**
- **Always point pretensioner cylinder away from body when handling.**

REMOVAL

1. Remove front seats. Refer to SE-20, "DRIVER SIDE : Removal and Installation" (Driver side) and SE-22, "PASSENGER SIDE : Removal and Installation" (Passenger side).
2. Remove rear seatback hinge. Refer to SE-31, "SEATBACK HINGE : Removal and Installation".
3. Remove center console lower. Refer to IP-20, "Removal and Installation".
4. Remove dash side finishers (LH/RH). Refer to INT-24, "DASH SIDE FINISHER : Removal and Installation".
5. Remove center pillar lower finishers (LH/RH). Refer to INT-25, "CENTER PILLAR LOWER FINISHER : Removal and Installation".

6. Disconnect negative and positive battery terminals, then wait at least three minutes. Refer to PG-67, "Removal and Installation (Battery)".

   WARNING:
   Before servicing the SRS, turn the ignition switch off, disconnect both battery terminals then wait at least three minutes.

7. Disconnect the harness connector (A) from the seat belt retractor (1).

   WARNING:
   - **Do not drop the seat belt retractor. Always handle it with care.**
   - **Always point pretensioner cylinder away from body when handling.**

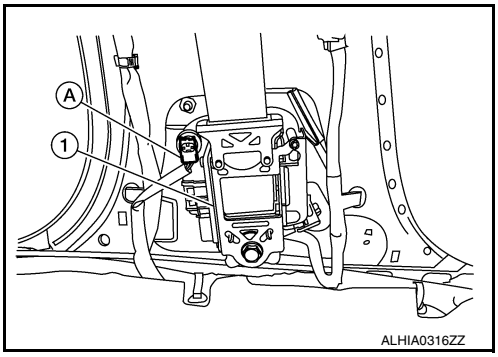

   CAUTION:
   - **For removing/installing the shoulder belt pre-tensioner harness connector, insert a thin screwdriver wrapped in tape into the notch, then lift the lock and remove the harness connector as shown.**
   - **Install the harness connector with the lock raised, and push the lock into the harness connector as shown.**
   - **After installing the harness connector, check that the lock is pushed in securely.**

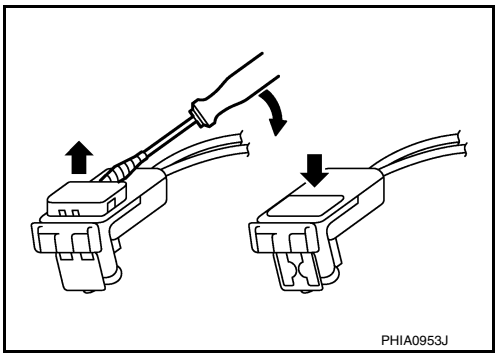

8. Remove seat belt lower anchor bolt.

   CAUTION:
   Before removing the seat belt lower anchor bolt, note the positions of washers and spacers for correct installation.

9. Remove diagnosis sensor unit. Refer to SR-29, "Removal and Installation".
10. Remove shift selector. Refer to (5MT) or TM-229, "Removal and Installation" (CVT)
11. Remove A/C unit assembly bolt (C) and bracket (1) from vehicle.
12. Remove instrument panel lower bracket bolt (B) and screw (A) and reposition bracket as necessary to remove floor trim.

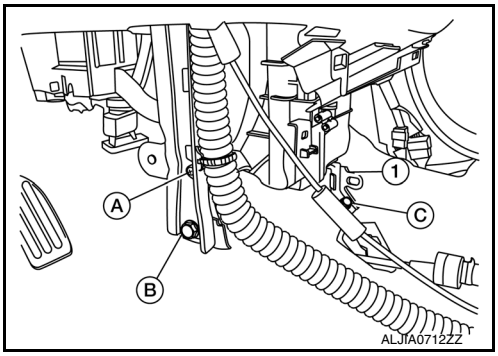

13. Release carpet hook clips with a suitable tool (A) and remove.
    △: Clip

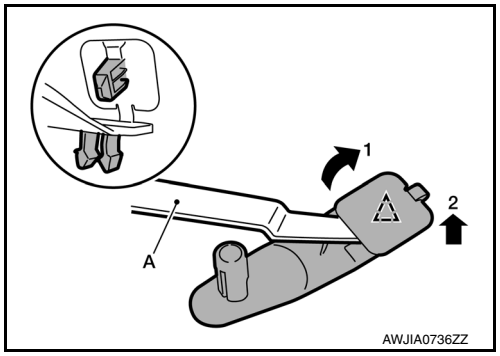

14. Release pawls using a suitable tool (A) and open the harness clips.
    ◌: Pawl

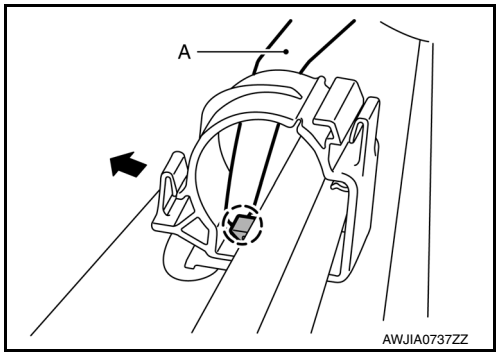

15. Remove floor trim.

INSTALLATION

Installation is in the reverse order of removal.

CAUTION:

- **Replace harness protector B with a new part after removal. Do not reuse harness protector B.**

HEADLINING

Exploded View

INFOID:0000000008969713

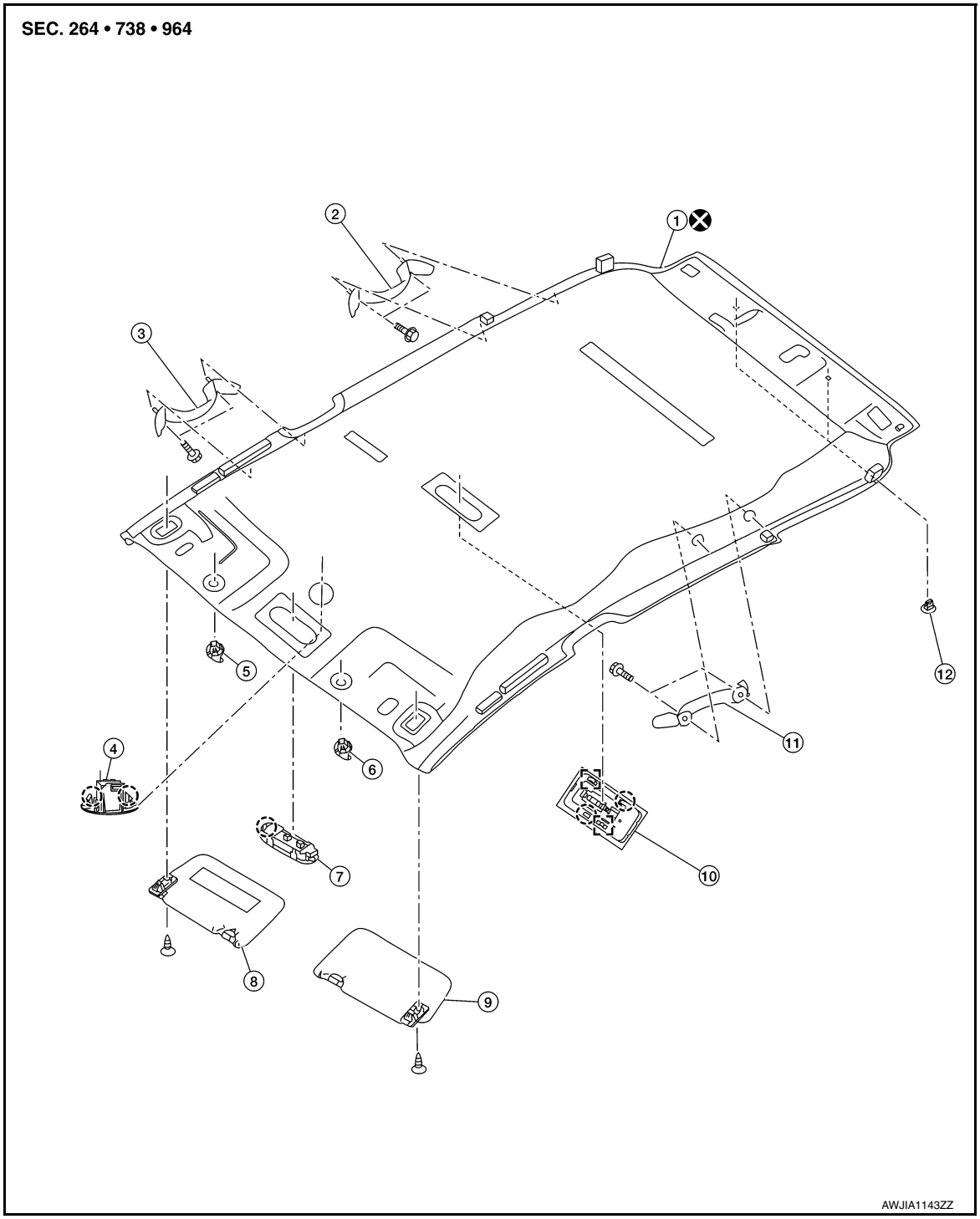

1. Headlining	2. Rear assist grip (RH)	3. Front assist grip (RH)
4. Microphone (if equipped)	5. Sun visor holder (RH)	6. Sun visor holder (LH)
7. Map lamp (if equipped)	8. Sun visor (RH)	9. Sun visor (LH)
10. Interior room lamp	11. Rear assist grip (LH)	A. Headlining clip
Pawl		

Removal and Installation

INFOID:0000000008969714

REMOVAL

1. Remove front pillar finishers (LH/RH). Refer to INT-21, "FRONT PILLAR FINISHER : Removal and Installation".
2. Remove sun visor screws and sun visorS (LH/RH).
3. Remove map lamp (if equipped). Refer to INL-51, "Removal and Installation".
4. Remove interior room lamp. Refer to INL-53, "Removal and Installation".
5. Remove microphone (if equipped). Refer to AV-59, "Removal and Installation".
6. Remove center pillar upper finishers (LH/RH). Refer to INT-25, "CENTER PILLAR UPPER FINISHER : Removal and Installation".
7. Remove luggage side upper finishers (LH/RH). Refer to INT-35, "LUGGAGE SIDE UPPER FINISHER : Removal and Installation".
8. Insert a suitable tool (A) at approximately a 30 degree angle into the sun visor holder notch on the front of the sun visor holder (1) and press in the locking tab (B) to release it. While holding in lock tab (B), rotate the sun visor holder (1) 90 degrees to release it from the headlining.
   ⇦: Front
   CAUTION:
   Do not force the sun visor holder when removing as the locking tab may be damaged if the suitable tool is not positioned correctly.
   NOTE:
   If the sun visor holder (1) does not fully rotate, make sure that the suitable tool (A) is pressing in on the locking tab (B) and is not positioned under locking tab (B). Reinsert the suitable tool (A) as necessary to release the locking tab (B).

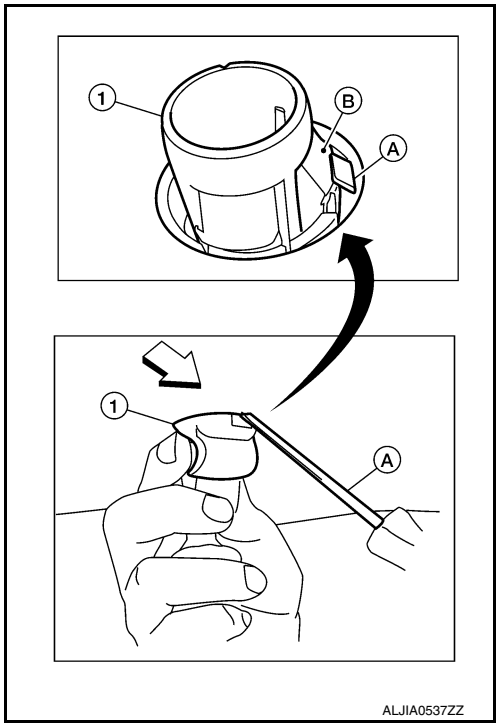

9. Release assist grip pawls and remove bolt (A) using a suitable tool and remove all assist grips.
   ⌒:Pawl
10. Remove headlining clips.
11. Remove headlining through the back door.
    CAUTION:
    - **Do not reuse headlining.**

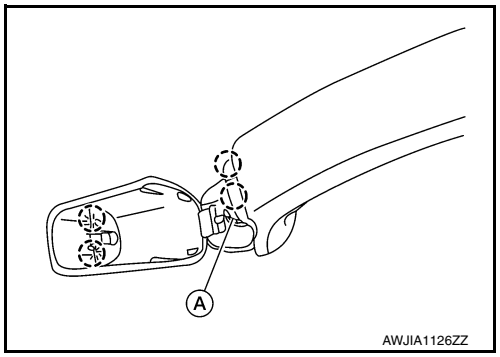

INSTALLATION

Installation is in the reverse order of removal.

CAUTION:
- **Remove all remaining adhesive from roof panel.**
- **Do not reuse headlining. Replace with new part after removal.**

- **Apply adhesive as shown before installing headlining.**

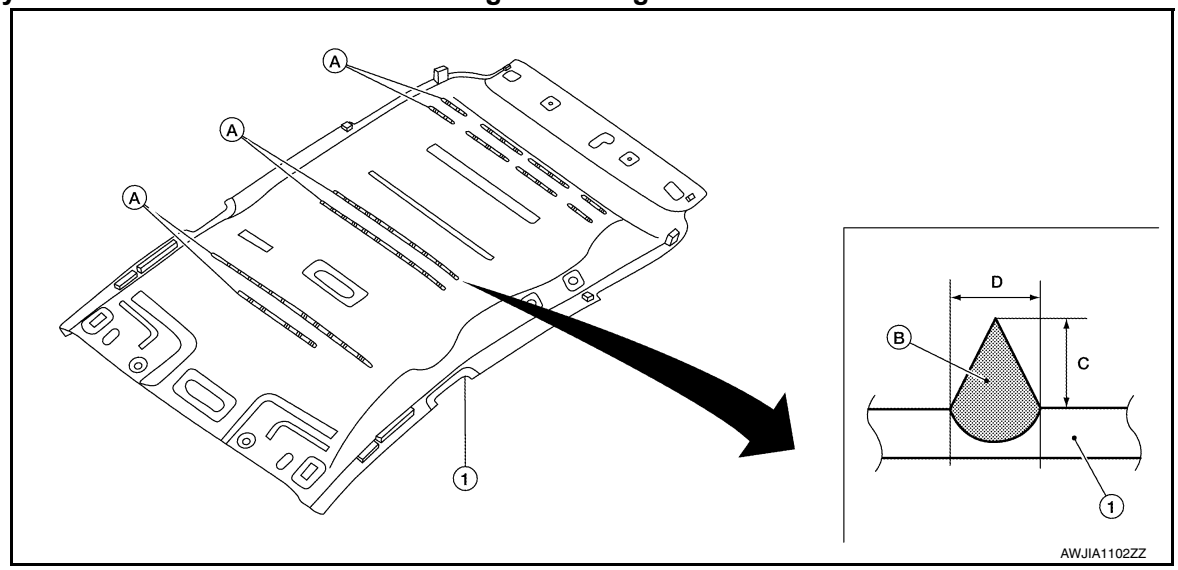

1. Headlining
B. Adhesive
D. 5 mm
A. Adhesive application location
C. 8 mm

- **Do not bend headlining when installing.**
- **When installing headlining, start by installing both sun visor holders and headlining clips to hold headlining in position.**
- **Be careful that the surface is not wrinkled when installing.**

LUGGAGE TRIM

Exploded View

INFOID:0000000008969715

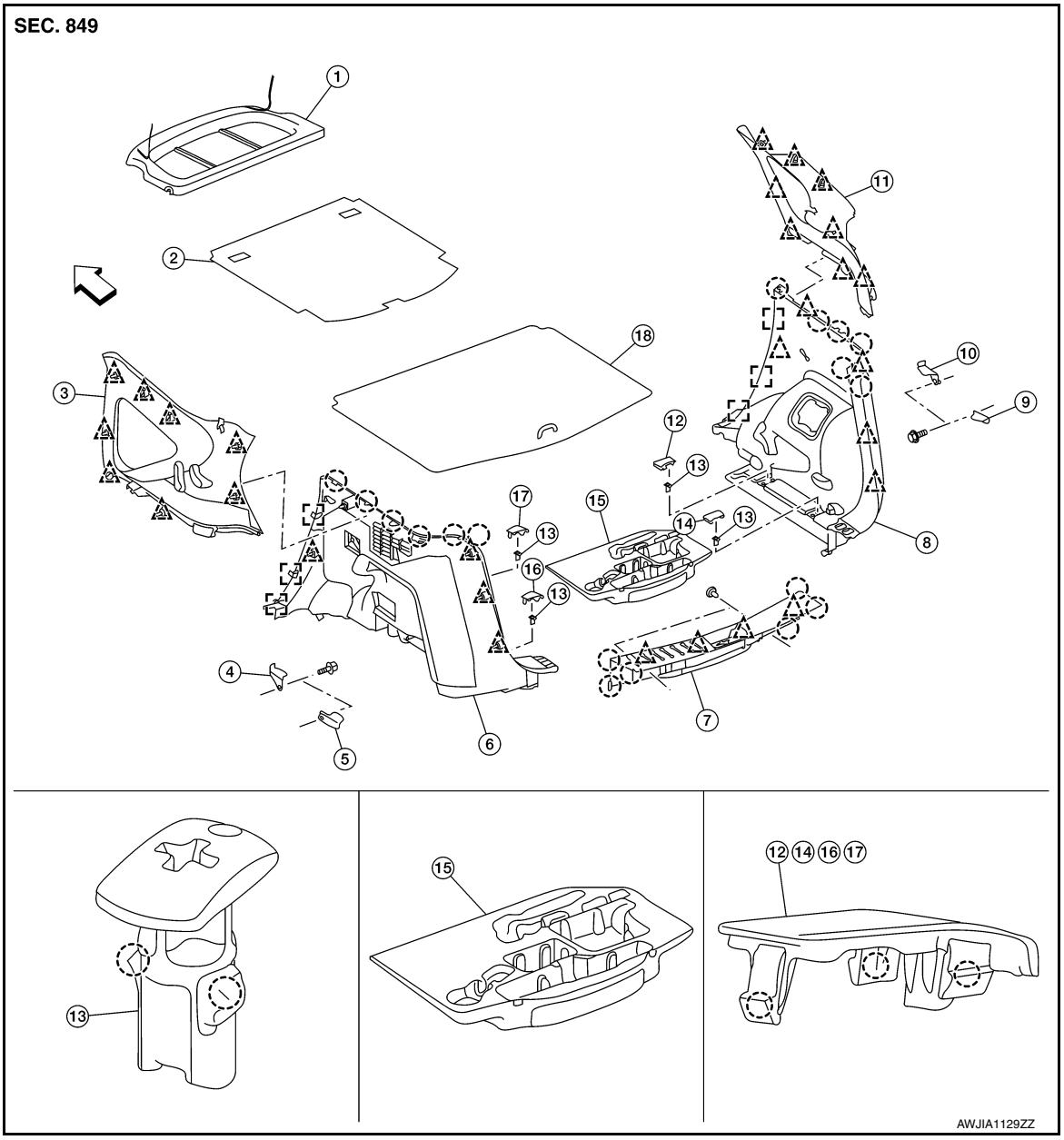

1. Parcel shelf finisher (if equipped)	2. Luggage floor board (if equipped)	3. Luggage side upper finisher (LH)
4. Luggage side front reinforcement (LH)	5. Luggage side rear reinforcement (LH)	6. Luggage side lower finisher (LH)
7. Luggage rear plate	8. Luggage side lower finisher (RH)	9. Luggage side rear reinforcement (RH)
10. Luggage side front reinforcement (RH)	11. Luggage side upper finisher (RH)	12. Luggage side front cover (RH)
13. Luggage side clip	14. Luggage side rear cover (RH)	15. Luggage floor box
16. Luggage side rear cover (LH)	17. Luggage side front cover (LH)	18. Luggage floor trim
Pawl	Metal clip	Clip
Front		

LUGGAGE REAR PLATE

LUGGAGE REAR PLATE : Removal and Installation

INFOID:0000000008969716

REMOVAL

1. Remove luggage floor board (if equipped).
2. Remove luggage floor trim.
3. Remove luggage rear plate clips (A).

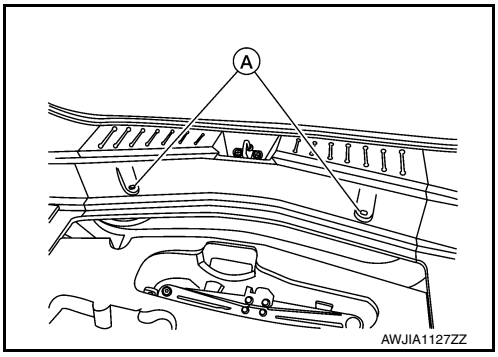

4. Release luggage rear plate clips using a suitable tool (A) and remove luggage rear plate as shown.
   ⚠: Clip

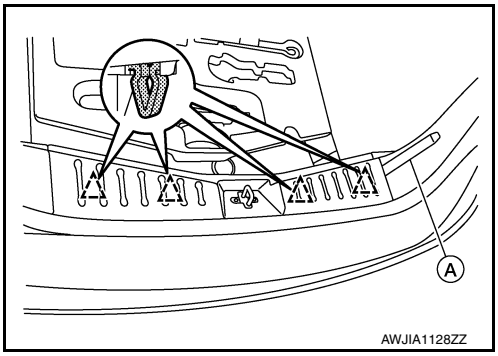

INSTALLATION

Installation is in the reverse order of removal.

CAUTION:

- **Visually check the clips and pawls for deformation and damage during installation.**
- **When installing luggage rear plate, check that clips are securely placed into body holes.**

LUGGAGE SIDE LOWER FINISHER

LUGGAGE SIDE LOWER FINISHER : Removal and Installation

INFOID:0000000008969717

REMOVAL

1. Partially remove rear body side welt. Refer to INT-24, "BODY SIDE WELT : Removal and Installation".
2. Remove luggage floor board (if equipped).
3. Remove luggage floor trim.
4. Remove seat back hinge. Refer to SE-31, "SEATBACK HINGE : Removal and Installation".
5. Release rear parcel shelf finisher clips using a suitable tool and remove rear parcel shelf finisher (if equipped).
6. Remove luggage side lower finisher pawls using a suitable tool.

◌: Pawl

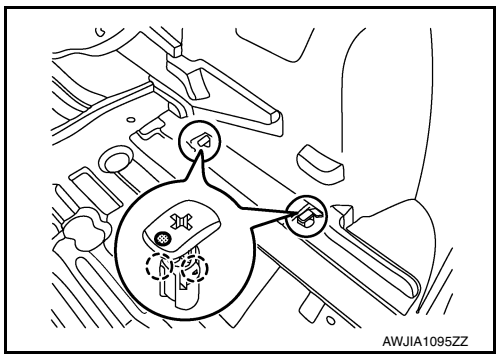

7. Release the harness connector from cargo room lamp (RH only) and remove luggage side lower finisher.

INSTALLATION

Installation is in the reverse order of removal.

CAUTION:

- **Visually check the clips and pawls for deformation and damage during installation.**
- **When installing luggage side clip, press luggage side clip so that upper side stamp mark faces toward passenger room, and then completely engage luggage side clip pawls.**

LUGGAGE SIDE UPPER FINISHER

LUGGAGE SIDE UPPER FINISHER : Removal and Installation

INFOID:0000000008969718

REMOVAL

1. Remove luggage side lower finisher. Refer to INT-34, "LUGGAGE SIDE LOWER FINISHER : Removal and Installation".
2. Remove seat belt lower anchor bolt.
3. Release luggage side upper finisher clips using a suitable tool and remove luggage side upper finisher.

   △: Clip

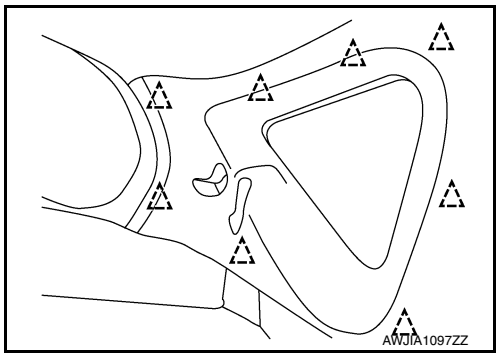

INSTALLATION

Installation is in the reverse order of removal.

CAUTION:

- **Visually check the clips for deformation and damage during installation.**
- **When installing luggage side upper finisher, check that clips are placed in body holes.**

BACK DOOR TRIM

Exploded View

INFOID:0000000008969719

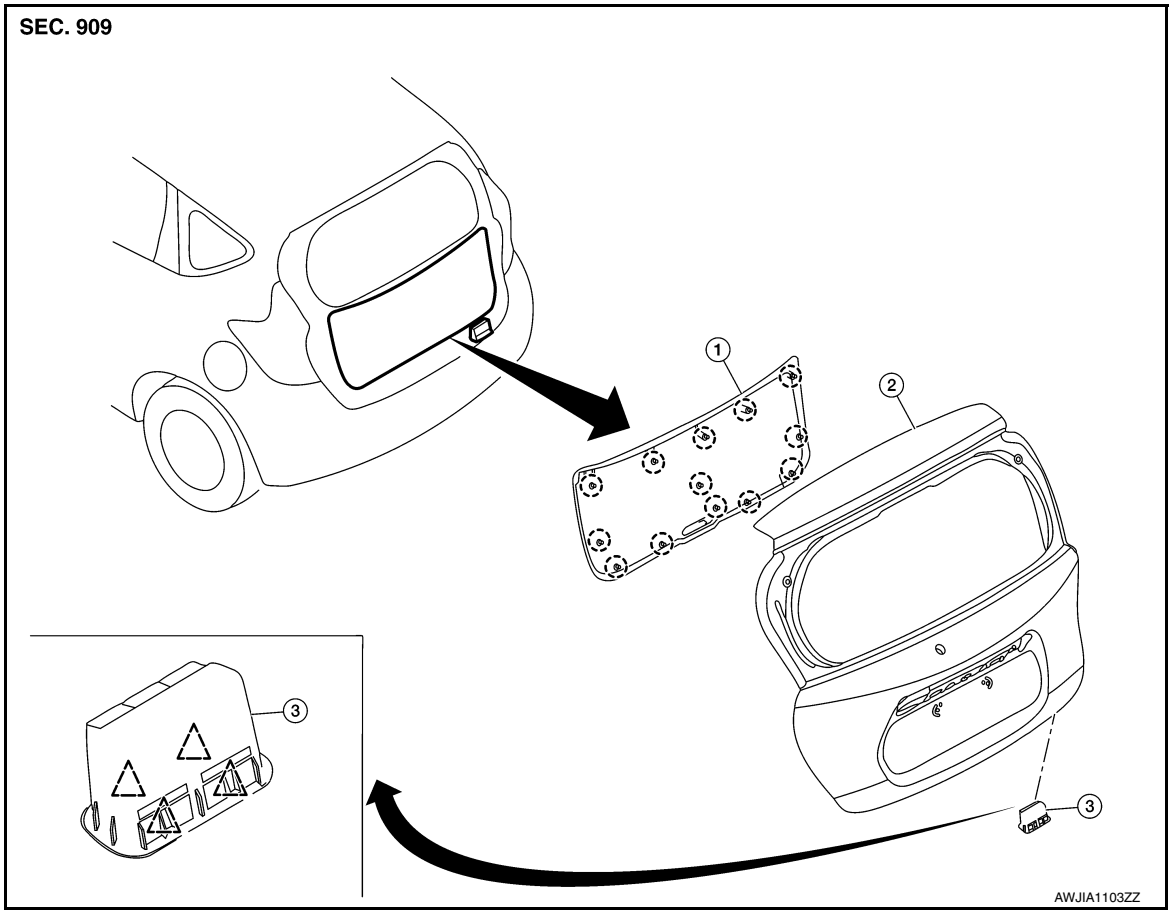

1. Back door inner finisher
2. Back door panel
3. Back door pull handle

Clip
Pawl

BACK DOOR INNER FINISHER

BACK DOOR INNER FINISHER : Removal and Installation

INFOID:0000000008969720

REMOVAL

1. Release back door inner finisher clips using a suitable tool and remove.

INSTALLATION

Installation is in the reverse order of removal.

CAUTION:

- **Visually check the clips for deformation and damage during installation.**
- **When installing back door inner finisher, check that locate pin and clips are placed in body panel holes.**

BACK DOOR PULL HANDLE

BACK DOOR PULL HANDLE : Removal and Installation

INFOID:0000000008969721

REMOVAL

1. Release pawls using a suitable tool and remove.

INSTALLATION

Installation is in the reverse order of removal.

CAUTION:

- **Visually check the pawls for deformation and damage during installation.**
- **When installing, confirm upper and lower orientation of back door pull handle, then install it.**
- **When installing back door pull handle, check that pawls are placed in body panel holes.**